S-Band Antenna-Mount SSPA

These high power solid-state amplifiers offer output powers of 50 or 100 watts across the 2.0 to 2.15 GHz satellite uplink band. Housed in a compact weatherproof enclosure, the amplifier can be mounted in an antenna hub or outdoors in applications where it is desirable to reduce cable losses by mounting the SSPA close to the antenna. The amplifier features a microprocessor-based M&C system that facilitates easy setup and control.

Features

- 50/100 W saturated output power
- 70 dB gain
- Built-in monitor and control
- Temperature-compensated gain from -40 to +50 °C
- Serial interface (RS-232/-422/-485)
- Output isolator for high load VSWR protection
- 20 dB range digital gain adjustment
- RF output sample port (-40 dBc)
- Output power monitor
- Extremely light weight, nominally 36 lb (16 kg)
- Mounts on small antennas

Options

- 1:1 redundancy

Outline Drawing

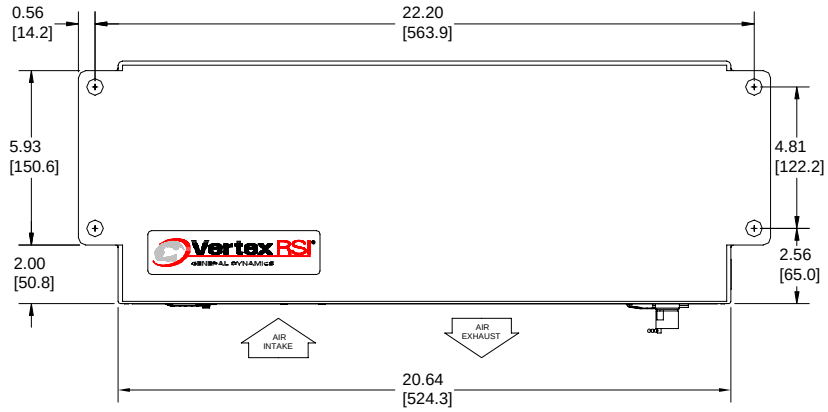

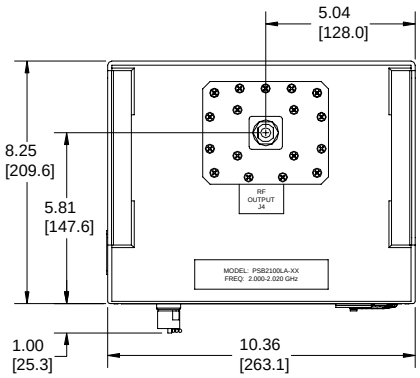

NOTES:

1) DIMENSIONS ARE IN INCHES [MM].
2) AIR INTAKE AND EXHAUST MUST NOT BE OBSTRUCTED.
3) APPROXIMATE WEIGHT IS 36 LB. (16 KG).

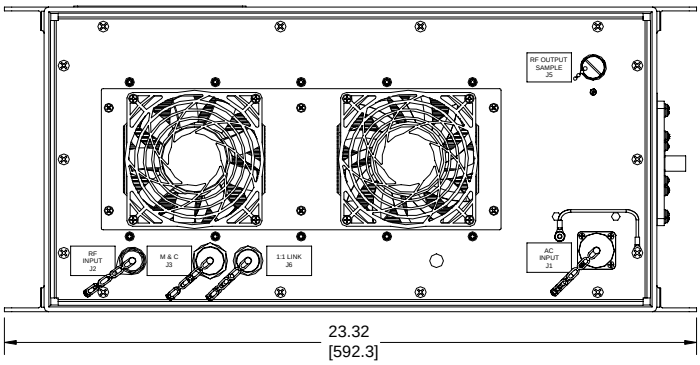

M&C (J3) Pinout

Serial I/O Tx +	A	
Serial I/O Tx –	B	
Serial I/O Rx –	C	
Serial I/O Rx +	D	
Serial I/O Rx Termination	J	
Ground	E	
Service Request (Form 'C' output)	F	Closed on Svc Req
	G	Common
	H	Open on Svc Req
(no connection)	K	

Outline 20850

Part Number/Ordering Information

SSPAs
Part/Model No.: **PSB2 ☐ LA-XX**

50 watts = 050
100 watts = 100

Options:

1:1 Redundancy 4
Redundant capability
(Required for units in 1:1 systems)

Block Upconverter 7
L-Band IF Input

Redundant Systems (Consists of 1:1 switching assembly, two SSPAs, and interconnecting cables):

Part/Model No.: **PRS1B ☐ LA-XX**

50 watts = 050
100 watts = 100

Options:

Block Upconverter 7
L-Band IF Input

Maintenance Switch ..... A
Selects antenna or dummy load
at system output.

Related Accessories:

- **RCP-2001** SSPA Remote Control Panel
  1U-high rack-mount panel provides user-friendly controls via menu display. Can be located up to 1.3 km (4000 ft.) away and interconnects with inexpensive cable.
- **AMSETUP** Antenna-mount SSPA configuration software (supplied with each unit).
  WIN98/2000/XP compatible.

1:1 System Outline

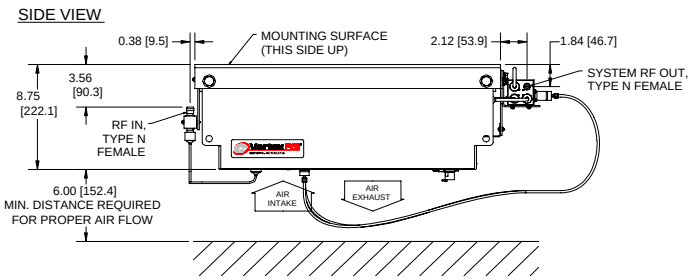

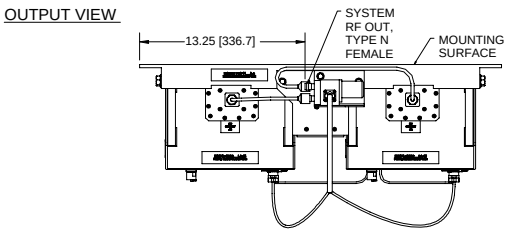

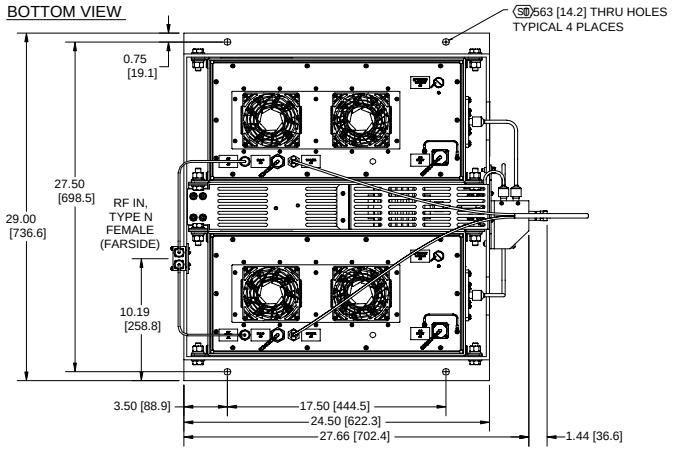

NOTES:

1) ALL DIMENSIONS ARE IN INCHES AND [MILLIMETERS].
2) APPROXIMATE WEIGHT: 80 LBS. [36 KG].

Outline 20735

2120 Old Gatesburg Road, State College, PA 16803 USA • Telephone 814-238-2700 • FAX 814-238-6589
www.gdsatcom.com

Parameter	Notes	Min	Nom/Typ†	Max	Units
Frequency Range		2.0		2.15	GHz
Gain, at maximum gain setting		70			dB
Gain Adjust Range		20			dB
Gain Flatness	Full band Per 40 MHz			±0.5 ±0.3	dB dB
Gain Stability vs. Temperature	-40 to +50 °C		±1.0	±1.5	dB
Saturated Power Output	*50 W* *100 W*		+47 (50) +50 (100)		dBm (W) dBm (W)
Power Output, at 1 dB compression ($P_{1\ dB}$)	*50 W* *100 W*	+46 (40) +49 (80)			dBm (W) dBm (W)
Two-tone Intermodulation	At 3 dB total backoff from 1 dB compression point		-30	-25	dBc
Group Delay	Linear Parabolic Ripple			0.03 0.003 1.0	ns/MHz ns/MHz^2 ns p-p
AM/PM Conversion	At $P_{1\ dB}$		2.5	3.5	°/dB
Noise Figure	At maximum gain		11		dB
VSWR	Input Output		1.35 1.20	1.50 1.30	:1 :1
Output Sample Port			-40		dBc
Connectors	Input Output Sample Port I/O Power		Type N Female Type N Female Type N Female 10-pin MS, mate supplied 3-pin MS, mate supplied		
Power Requirements	Voltage Frequency Power, *50 W* Power, *100 W* Power factor corrected	 47	90-135 or 180-270 350 650 0.98	 63 450 900	Vac Hz W W
Cooling System			Forced air		
Operating Temperature Range	Ambient air temperature	-40		+50	°C
Weight	Approximate		36 (16)		lb (kg)
Dimensions	See outline drawing		8.25 x 23.32 x 10.36 210 x 592 x 263		inches mm

† When there is only one value on a line, this column is a nominal value. Otherwise it is a typical value. Typical values are intended to illustrate typical performance, but are not guaranteed.

OTHER VertexRSI PRODUCTS

- **Low Noise Amplifiers and LNA Systems**
- **Solid-State Power Amplifiers and SSPA Systems**
- **General Purpose Converters**
- **Satellite Communications Equipment**
- **Custom Subsystems**

20943 Rev. A ECR 9036 8/29/08 SLG
Specifications are subject to change at VertexRSI's discretion.

2120 Old Gatesburg Road, State College, PA 16803 USA • Telephone 814-238-2700 • FAX 814-238-6589
www.gdsatcom.com